MINI PISTOL AIR POLISHER EXPLODED VIEW

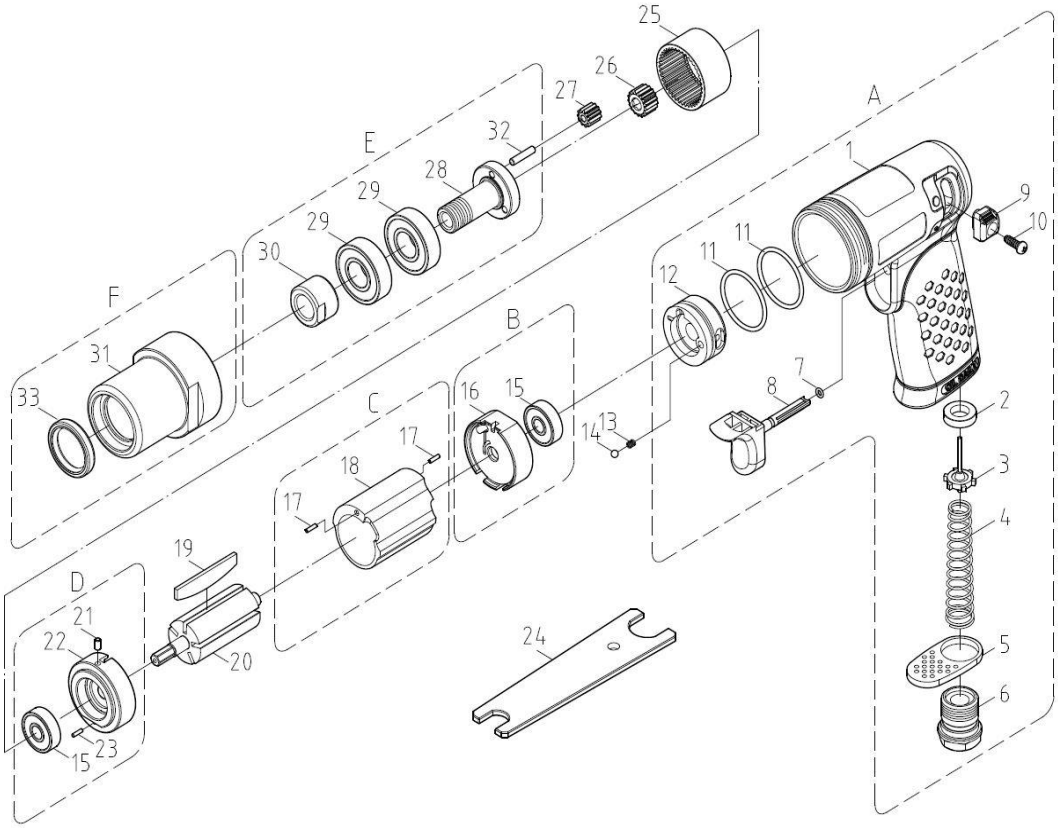

PART LIST

NO.	CODE NO.	PARTS NAME	Q'TY
1	2-001106001	Housing	1
2	2-927010	Oil Seal	1
3	2-010105801	Pin Valve Rod	1
4	2-002105802	Cone Spring	1
5	2-004105801	Exhaust Deflector	1
6			1
	2-005105801-04	Air Inlet	
7	2-916002510	O-Ring	1
8	2-030105801	Trigger	1
9	2-031105801	Reverse Lever	1
10	2-9263510-02	Screw	1
11	2-916025118	O-Ring	2
12	2-068106001	Rear Plate Spacer	1
13	2-007101002	Spring	1
14	2-9180318	Steel Ball	1
15	2-902626-02	Ball Bearing	2
16	2-011106001	Rear Plate	1
17	2-9281506	Spring Pin	2
18	2-012103302	Cylinder	1
19	2-014106001	Blade	5
20	2-013106201	Rotor	1
21	2-9282505	Spring Pin	1
22	2-015105801	Front Plate	1
23	2-91701506	Pin	1
24	3-576106101	Wrench	1

NO.	CODE NO.	PARTS NAME	Q'TY
25	2-034106201	Internal Gear	1
26	2-036106202	Gear	1
27	2-036106201	Gear	3
28	2-037106203	Gear Carrier	1
29	2-9026001-02	Ball Bearing	2
30	2-035106203	Lock Nut	1
31	2-027106202	Front Casing	1
32	2-91703014	Pin	3
33	2-927011	Oil Seal	1

Consumable parts No. 2, 3, 7, 11, 13, 14, 19, 25, 26, 27

HAS-P1062

DEC. 2023